TP3420A Line Interface Circuit Considerations

National Semiconductor
Application Note 872
Raj Paripatyadar
Victor Thang Van
Andrew McLean
March 1994

This applications note discusses the TP3420/TP3420A line interface circuit requirements to meet ETSI/ICOT conformance tests criteria and supplements the information in the TP3420 applications guide AN-665 included in the Telecom 1992 data book. The information in this applications note applies to both TP3420 and TP3420A, however we will only refer to TP3420A. The tests most affected by the line interface circuit are:

A. Pulse Mask Tests,
B. Impedance at the Transmitter and Receiver
C. EMI Radiation Considerations
D. Longitudinal Balance Requirement, and
E. Receiver Sensitivity.

CCITT I.430 and ANSI T1-605 standards specify the use of a connecting cord of length 10m max (typically 7m) for attaching a Terminal Equipment (TE) to the "S" interface wall jack, and hence all conformance tests are conducted with the cord attached. The user is allowed to specify the use of a special cord (with less capacitance and/or shorter length) for use with his TE. The resistance and capacitance of the cord impact mainly the impedance tests. No connecting cord is required for an NT (linecard) or NT1 product.

A. TRANSMIT PULSE MASK TESTS

These tests are conducted with test load impedances of 400Ω, 50Ω, and 5.6Ω. The TP3420A transmitter's drive current is trimmed in production to allow for the insertion loss in the line interface circuit shown in *Figure 1* to meet the pulse masks. The use of excessive resistance in the external circuit can cause the 50Ω pulse mask tests to become marginal. See the next section.

B. IMPEDANCE REQUIREMENTS

There are several impedance tests in the standards.

Transmitter and Receiver Impedance While Inactive

The transmitter and receiver of the device remain in high impedance mode under the following conditions: in the absence of any power, in low-power (PDN) state or while in PUP state but inactive (i.e., transmitting "1"s). This simplifies the external circuit and does not need the use of any relays to cause high impedance state when power is lost. The transmitter driver is based on a current source design and the receiver is a high impedance input stage of an Op Amp. The transmit and receive impedance of the device are therefore high (over 5 kΩ) over the bandwidth of interest (0 Hz to 80 kHz is for TE, and 0 Hz to 106 kHz is for NT).

The impedance templates to be met are in ANSI T1.605 and CCITT I.430. The low frequency roll-off point is determined by the inductance of the transformer and the high frequency roll-off point is determined by the total capacitance seen from the wall jack looking into the equipment. This consists of the capacitance of the protection diodes (fast switching diodes have less capacitance than zeners), inter-winding capacitance of the transformer, any capacitance in the EMI filtering chokes, capacitance of protection circuit and the connecting cord capacitance (for the TE). Please also see the Applications Note AN-665 for calculation details.

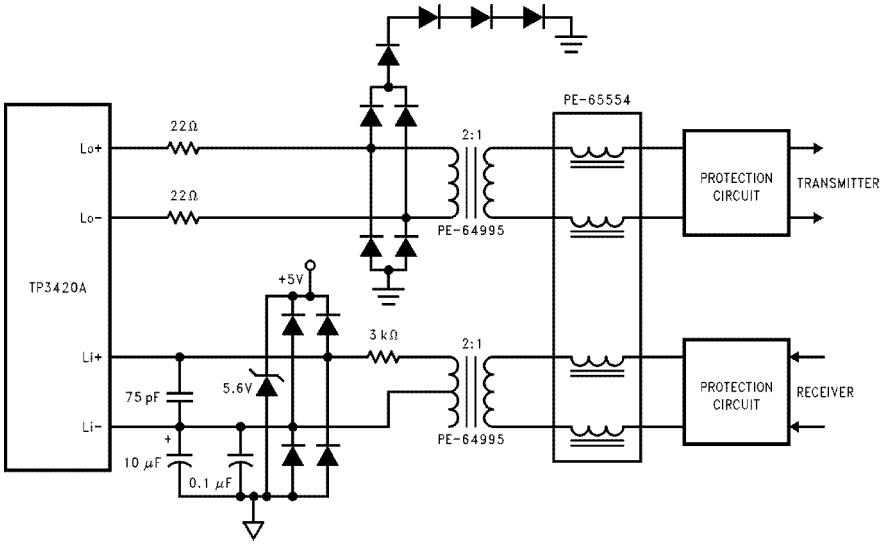

TL/H/11783–1

FIGURE 1. TP3420A Analog Line Interface Circuit

 RRD-B30M75/Printed in U. S. A.

Transmitter Output Impedance While Active

These tests measure the output impedance of the equipment when driving Zeros (mark conditions) and Ones (high impedance) into 400Ω and 50Ω test loads. The device line-driver output stage is of a voltage-limited current source design and as such exhibits a high output impedance when used in conjunction with the specified 2:1 transformer and 50Ω line termination. To simulate the situation of multiple TE's transmitting on a passive bus configuration the CCITT I.430 and ANSI T1.605 suggest that a test load of 400Ω be used to model the effect of the increased voltage on the bus during pulse "collisions". With this loading the TP3420A SID reverts to a voltage-limiting action and the output impedance of the device is reduced. With some systems the combined impedance from the device, the DC winding resistance of the transformer and other externals may not be enough to guarantee the 20Ω minimum required by the specifications.

In this case an additional resistance can be added in series with the line drivers to increase the effective impedance seen from the line. Care must be taken in selecting an appropriate value however, as adding too much resistance can reduce the pulse amplitude below the specified minimum limit. The external resistance can be added either between the device line output pins and the transformer, or on the line side between the transformer and the S interface socket—provided that due regard is taken of the impedance scaling property of the transformer when selecting the component value.

With a 400Ω termination the TP3420A SID provides a typical output impedance of 26Ω measured on the device side of the transformer or 6.5Ω with respect to the line interface.

Therefore we have the following relationship for impedance looking in to the transmitter from the wall jack:

$$\frac{(R_s + 26)}{n^2} + R_p + R_{ext} \geq 20\Omega$$

where, R_s = DC impedance of transformer secondary

R_p = DC impedance of transformer primary

n = Transformer turns ratio = 2

R_{ext} = combined resistance of all other components: cord, chokes, etc.

After accounting for all the external components R_{ext} should be supplemented by additional resistors if necessary to satisfy the inequality. Although a reasonable resistor tolerance is acceptable, adding values in excess of that calculated may reduce the pulse amplitude below the ±10% tolerance allowed by the specification.

For example, the recommended Pulse Engineering transformer, PE-64995 has $R_s = 4\Omega$ and $R_p = 2.3\Omega$ typically. To satisfy the output impedance criteria requires that $R_{ext} \geq 10.2\Omega$. Taking into account of a 2Ω resistance of the 7 meter cord, and 0.6Ω resistance of the EMI chokes, two 3.6Ω (r) added on the transformer line side, **or** alternatively two 16.5Ω (R) resistors on the device (secondary) side of the transformer will be just sufficient to meet the impedance test.

To allow for component tolerances, a resistance value of R = 22Ω and r = 0Ω or R = 0Ω and r = 5.5Ω each gives a reasonable margin in meeting the impedance requirement. The circuit schematic is shown in *Figure 2.*

In applications using different transformers and connecting cords, it may be necessary to optimize the value of external resistance R (or r) to meet the output impedance specification and the pulse mask at 50Ω.

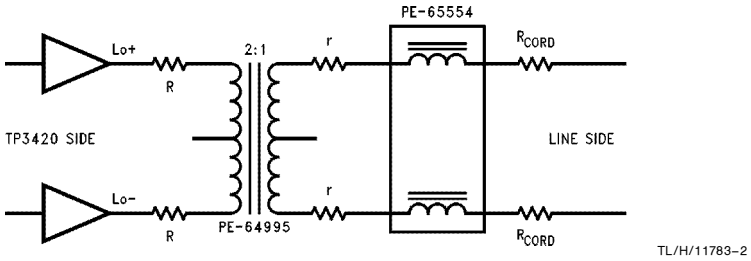

PE-64995:
$R_s = 4\Omega$
$R_p = 2.3\Omega$

PE-65554
$2\,R_{DC} = 0.60\Omega$

2 Rcord = 2Ω

Notes: R = 22Ω, r = 0Ω if resistors are added on the chip side
R = 0Ω, r = 5.5Ω if resistors are added on the line side

Note: Protection circuit is not shown

FIGURE 2. TP3420A Transmitter Connection Diagram

C. EMI RADIATION REQUIREMENTS

Terminal equipment as well as other Telecom equipment may be required to pass certain FCC regulations (such as FCC Section 15) for the level of high frequency radiation emitted by the connecting cord attached to the equipment. The TP3420A does not itself generate excessive high frequency noise, however use of high frequency microprocessors in the system may cause high frequency noise to be coupled via the power supply lines to the output. The use of EMI chokes such as the pulse engineering PE-65554 helps to reduce these common mode radiation levels. The EMI chokes need to have minimal resistance (to reduce insertion loss) and capacitance. Note that if capacitors are used for EMI filtering, their tolerances will affect the common mode line balance as well as line impedance.

D. LONGITUDINAL BALANCE REQUIREMENTS

The Longitudinal Balance or Longitudinal Conversion Loss (LCL) specification per CCITT I.430, section 8.5.6 is stated as follows:

10 kHz to 300 kHz > 54 dB

300 kHz to 1 MHz: Value is decreased by 20 dB per decade

Recent measurement of receiver longitudinal balance measurements using the circuit diagrams shown in Telecom Data book 1990 or 1992 (for the 2:1 or the 1:1 case of the receiver transformer winding ratio) gives a value of about 54 dB at 300 kHz. This figure is marginal and hence pass/fail condition is largely dependent on transformer design, component layout and measurement method.

Three techniques are described which improve longitudinal balance on the receiver side. **The first method gives the best overall result for longitudinal balance and receiver sensitivity and is therefore recommended.**

Circuit Details

The LCL specs apply to both the transmitter and receiver of the equipment. TP3420A's differential output driver coupled through a recommended bifilar line transformer (listed in 1992 NSC Telecommunications Data Book, AN-665) results in the transmitter's longitudinal balance exceeding CCITT I.430 specifications with good margin.

However, the first stage of the TP3420A receiver is a single-ended input filter, operated from a single 5V power supply. The differential to single-ended conversion is accomplished by connecting one side of the transformer secondary to the Li− pin which is driven by an internal reference generator and biased to half of the device power supply level. This pin requires a 10 μF capacitor to ground to filter any high frequency noise on the line and to ensure optimum receiver sensitivity. Li+ pin is connected to the transformer secondary through a single time constant RC pre-filter which limits the noise bandwidth. The longitudinal balance is therefore provided by the transformer whose design becomes important. At higher input frequencies the stray capacitance between the transformer windings couple any longitudinal signal to the transformer secondary, and the dissimilar input impedance caused by the 10 μF capacitor degraded the LCL performance.

Method 1: Use 2:1 Transformer in 1:1 Configuration

This is the recommended method. The circuit is shown in *Figure 1* and *Figure 3.* In this circuit, Li− pin of the TP3420A MUST BE connected to the 2:1 transformer centered tap to obtain an excellent balance result. An experiment with PE-64995 (2:1 transformer) together with PE-65554 EMI chokes results in a longitudinal balance of over 70 dB at 300 kHz which far exceeds the CCITT I.430 balance specification. Both transformer and chokes are made by Pulse Engineering.

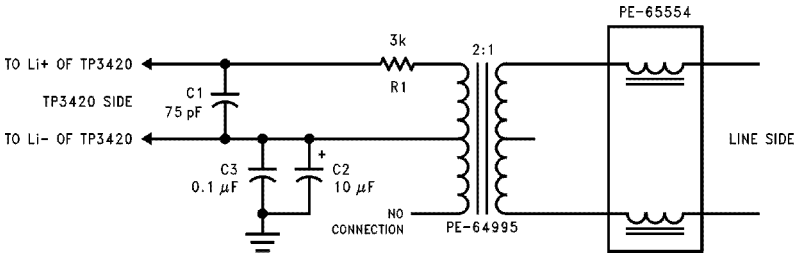

TL/H/11783–3

Note: Protection circuit is not shown

FIGURE 3. TP3420A Receiver Connection with 1:2 Transformer Diagram

The following is an explanation for the good results. *Figure 4* shows an estimate equivalent circuit of *Figure 1.* R2 **AND** C4 are added for explanation purpose only and do not form part of the applications circuit. Assume that the transformer and the two chokes, R1 and R2, C1 and C4 are perfectly balanced, then Z_{TIP} is equal to Z_{RING} or the circuit is also perfectly balanced regardless of the impedance magnitude from Li− to ground, since Li− is now at the transformer center tap. Experiment shows that at high frequency, the transformer wiring becomes more capacitive, thus the coil impedance (Z_{L2}) becomes small enough to dominate the effect of R2 and C4. With R2 and C4 taken out from the circuit as shown in *Figure 1,* balance result is above 70 dB at 300 kHz when measured with K1403 Siemens ISDN tester. This gives plenty of margin to meet the specifications. The measurement result is shown in *Figure 5.*

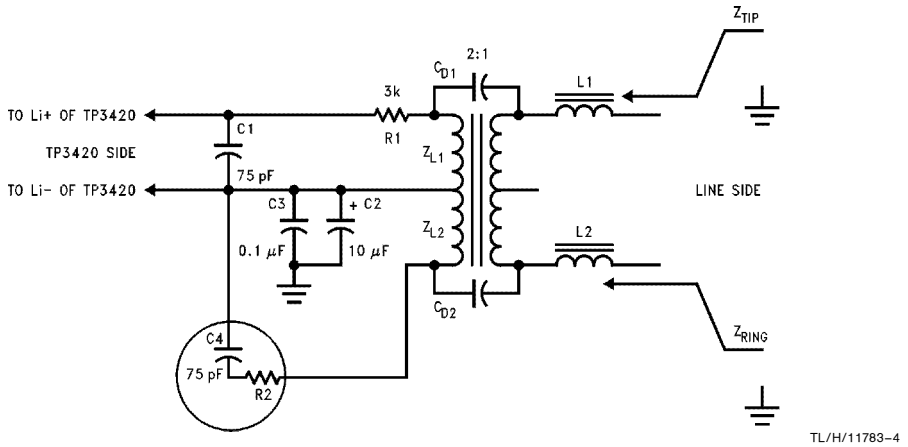

Note: R2 and C4 are added for clarification only and do not form part of applications circuit.

FIGURE 4. Estimated Equivalent Circuit of *Figure 2*

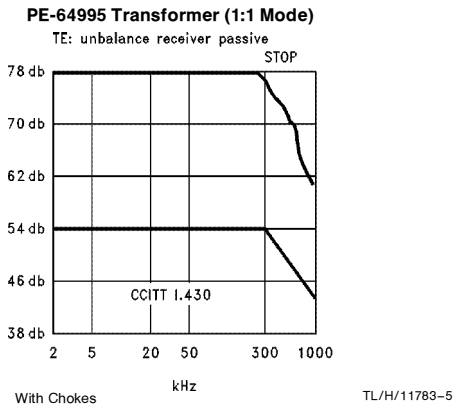

FIGURE 5. Longitudinal Balance Measurement Result for the TP3420A Receiver with 2:1 Transformer Used in 1:1 Configuration

Method 2: Using a 1:1 Transformer and a Capacitor

This procedure is provided if Method 1 cannot be used. To improve longitudinal balance in the configuration with a 1:1 receiver transformer, connect a 0.1 μF capacitor from the transformer centered tap (on the line side) to ground as shown in *Figure 6.* For terminal equipment for in-house use where lighting surge protections are not required, the capacitor voltage rating of 50V to 100V is adequate, but if lighting surge protections are required in trunk applications, the capacitor voltage rating must be scaled up accordingly.

In addition, the result shown in *Figure 7* will be different if chokes are added on the line, or if a different vendor transformer is used. Therefore, it may be necessary to adjust capacitor value until the optimum LCL result is obtained according to the line interface components.

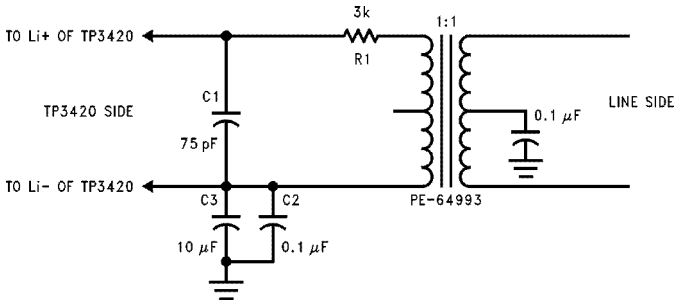

TL/H/11783–6

Note: Protection circuit is not shown

FIGURE 6. Receiver Connection Diagram with 1:1 Transformer

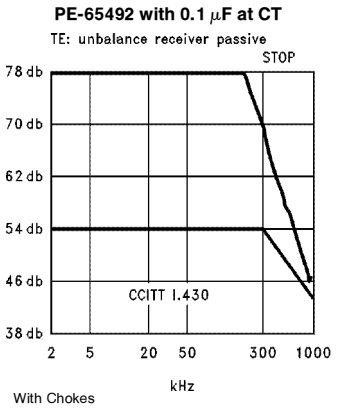

TL/H/11783–7

FIGURE 7. Longitudinal Balance Measurement Result of Circuit in *Figure 6*

Method 3: Using a 1:1 Transformer and a Series Resistor

This procedure is provided if Method 1 cannot be used. Improved longitudinal balance can also be obtained with a 1:1 transformer with an additional 5.6 kΩ resistor (R2) connected in series with Li− as shown in *Figure 8.* An experiment with R2 of 5.6 kΩ as shown in *Figure 8* shows that LCL still has reasonable margin relative to CCITT I.430 LCL template. Its result is shown in *Figure 9.*

Note that this method has one trade off; the loop range performance will be degraded by about 1.5 dB because the additional resistor (R2) slightly changes the pre-filtering characteristic of the receiver. Nonetheless, the TP3420A still exceeds CCITT I.430 range while meeting the balance specification.

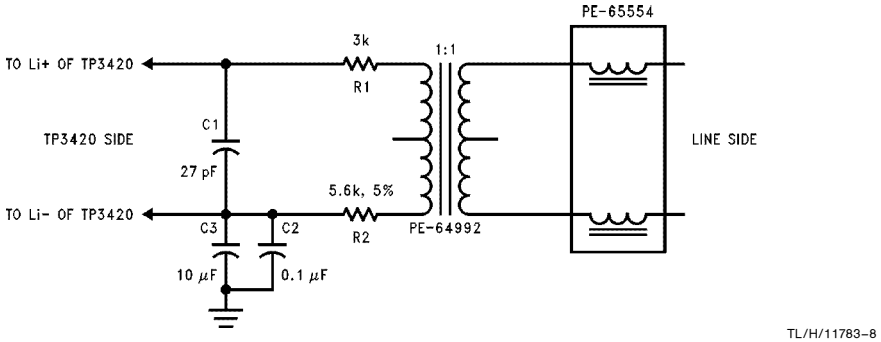

Note: Protection circuit is not shown

FIGURE 8. TP3420A Receiver Connection with 1:1 Transformer

PE-65492 1:1 Transformer (24 pF/5.47 kΩ)

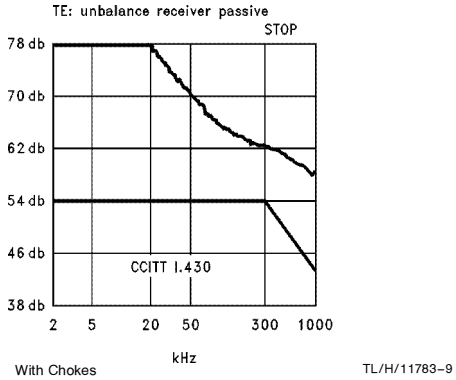

FIGURE 9. Longitudinal Balance Measurement Result of Circuit in *Figure 8*

E. RECEIVER SENSITIVITY

The receiver sensitivity tests are conducted over different loop configurations and in the presence of 200 kHz or 2 MHz interfering tones and with clock jitter induced at the NT's transmitter. With the recommended circuit in *Figure 1,* the TP3420A has been tested successfully over all these tests. The circuit in this figure gives the best margin for noise and extends range for all loop configurations.

F. PROTECTION CIRCUIT

The circuit in *Figure 1* shows some of the protection circuits around the TP3420A device. The stack of switching diodes absorbs high voltage spikes. A 5.6V zener between V_{CC} and ground placed next to the diodes clamps the power supply from rising above V_{CC} (5V) during these spikes. The series resistors help to reduce surge currents into the transformer and/or the device. Prolonged, high voltage protection may be provided by using high power clamping devices such as triacs (e.g., TISP2180 from Texas Instruments or P1553AA from Teccor Electronics) across line outputs and inputs, as well as positive temperature coefficient resistance (PTC) devices in series with the line (PTC100 from Raychem).

The lightning/surge protection using the Triacs and PTC are not normally required for TEs used on in-house wiring.

Line Transformer Manufacturers

Pulse Engineering	Phone number: 619-674-8130 Part number: PE-64995 (2:1 single transformer package) Part number: PE-65495 (2:1 dual transformer package)
Valor	Phone number: 619-537-2500 Part number: PT-5055 (2:1 dual transformer package) Part number: PT-5001 (2:1 single transformer package)
MID-COM	Phone number: 800-643-2661 Part number: 671-6322
Vernitron	Phone number: 813-347-2181 Part number: 328-0044
VAC	Phone number: Germany (49) 6181-38-2544 USA 908-494-3530 Part number: ZKB402 ZKB409

Note: Surface mount transformers are also available from Pulse Engineering and Valor.

LIFE SUPPORT POLICY

NATIONAL'S PRODUCTS ARE NOT AUTHORIZED FOR USE AS CRITICAL COMPONENTS IN LIFE SUPPORT DEVICES OR SYSTEMS WITHOUT THE EXPRESS WRITTEN APPROVAL OF THE PRESIDENT OF NATIONAL SEMICONDUCTOR CORPORATION. As used herein:

1. Life support devices or systems are devices or systems which, (a) are intended for surgical implant into the body, or (b) support or sustain life, and whose failure to perform, when properly used in accordance with instructions for use provided in the labeling, can be reasonably expected to result in a significant injury to the user.
2. A critical component is any component of a life support device or system whose failure to perform can be reasonably expected to cause the failure of the life support device or system, or to affect its safety or effectiveness.

National Semiconductor Corporation
2900 Semiconductor Drive
P.O. Box 58090
Santa Clara, CA 95052-8090
Tel: 1(800) 272-9959
TWX: (910) 339-9240

National Semiconductor GmbH
Livry-Gargan-Str. 10
D-82256 Fürstenfeldbruck
Germany
Tel: (81-41) 35-0
Telex: 527649
Fax: (81-41) 35-1

National Semiconductor Japan Ltd.
Sumitomo Chemical
Engineering Center
Bldg. 7F
1-7-1, Nakase, Mihama-Ku
Chiba-City,
Ciba Prefecture 261
Tel: (043) 299-2300
Fax: (043) 299-2500

National Semiconductor Hong Kong Ltd.
13th Floor, Straight Block,
Ocean Centre, 5 Canton Rd.
Tsimshatsui, Kowloon
Hong Kong
Tel: (852) 2737-1600
Fax: (852) 2736-9960

National Semiconductores Do Brazil Ltda.
Rue Deputado Lacorda Franco
120-3A
Sao Paulo-SP
Brazil 05418-000
Tel: (55-11) 212-5066
Telex: 391-1131931 NSBR BR
Fax: (55-11) 212-1181

National Semiconductor (Australia) Pty, Ltd.
Building 16
Business Park Drive
Monash Business Park
Nottinghill, Melbourne
Victoria 3168 Australia
Tel: (3) 558-9999
Fax: (3) 558-9998