NPN 2 GHz wideband transistor

BFW93

DESCRIPTION

NPN transistor in a plastic SOT37 envelope.

It is intended for use in VHF and UHF applications, primarily wideband aerial amplifiers in the 40 to 860 MHz range.

PINNING

PIN	DESCRIPTION
Code: BFW93/02	
1	base
2	emitter
3	collector

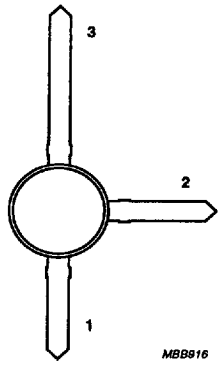

Fig.1 SOT37.

QUICK REFERENCE DATA

SYMBOL	PARAMETER	CONDITIONS	TYP.	MAX.	UNIT
V_{CBO}	collector-base voltage	open emitter	–	18	V
V_{CEO}	collector-emitter voltage	open base	–	10	V
I_{CM}	peak collector current	f > 1 MHz	–	100	mA
P_{tot}	total power dissipation	up to T_s = 155 °C (note 1)	–	300	mW
f_T	transition frequency	I_C = 50 mA; V_{CE} = 5 V; f = 500 MHz; T_j = 25 °C	1.7	–	GHz
C_{re}	feedback capacitance	I_C = 2 mA; V_{CE} = 5 V; f = 1 MHz; T_{amb} = 25 °C	0.6	–	pF
G_{UM}	maximum unilateral power gain	I_C = 30 mA; V_{CE} = 5 V; f = 800 MHz; T_{amb} = 25 °C	10.5	–	dB

Note

1. T_s is the temperature at the soldering point of the collector lead.

LIMITING VALUES

In accordance with the Absolute Maximum System (IEC 134).

SYMBOL	PARAMETER	CONDITIONS	MIN.	MAX.	UNIT
V_{CBO}	collector-base voltage	open emitter	–	18	V
V_{CEO}	collector-emitter voltage	open base	–	10	V
V_{EBO}	emitter-base voltage	open collector	–	2.5	V
I_C	DC collector current		–	50	mA
I_{CM}	peak collector current	f > 1 MHz	–	100	mA
P_{tot}	total power dissipation	up to T_s = 155 °C (note 1)	–	300	mW
T_{stg}	storage temperature		–65	150	°C
T_j	junction temperature		–	175	°C

THERMAL RESISTANCE

SYMBOL	PARAMETER	CONDITIONS	THERMAL RESISTANCE
$R_{th\ j\text{-}s}$	thermal resistance from junction to soldering point	up to T_s = 155 °C (note 1)	65 K/W

Note

1. T_s is the temperature at the soldering point of the collector lead.

CHARACTERISTICS

T_j = 25 °C unless otherwise specified.

SYMBOL	PARAMETER	CONDITIONS	MIN.	TYP.	MAX.	UNIT
I_{CBO}	collector cut-off current	I_E = 0; V_{CB} = 10 V	–	–	50	nA
h_{FE}	DC current gain	I_C = 25 mA; V_{CE} = 5 V	25	–	–	
		I_C = 50 mA; V_{CE} = 5 V	25	–	–	
f_T	transition frequency	I_C = 50 mA; V_{CE} = 5 V; f = 500 MHz	–	1.7	–	GHz
C_c	collector capacitance	$I_E = i_e$ = 0; V_{CB} = 5 V; f = 1 MHz	–	0.7	–	pF
C_e	emitter capacitance	$I_C = i_c$ = 0; V_{EB} = 0.5 V; f = 1 MHz	–	1.5	–	pF
C_{re}	feedback capacitance	I_C = 2 mA; V_{CE} = 5 V; f = 1 MHz; T_{amb} = 25 °C	–	0.6	–	pF
G_{UM}	maximum unilateral power gain (note 1)	I_C = 30 mA; V_{CE} = 5 V; f = 800 MHz; T_{amb} = 25 °C	–	10.5	–	dB
F	noise figure	I_C = 2 mA; V_{CE} = 5 V; f = 500 MHz; T_{amb} = 25 °C; G_S = 20 mS; B_S is tuned	–	–	5	dB

Note

1. G_{UM} is the maximum unilateral power gain, assuming S_{12} is zero and $G_{UM} = 10 \log \frac{|S_{21}|^2}{(1-|S_{11}|^2)(1-|S_{22}|^2)}$ dB.

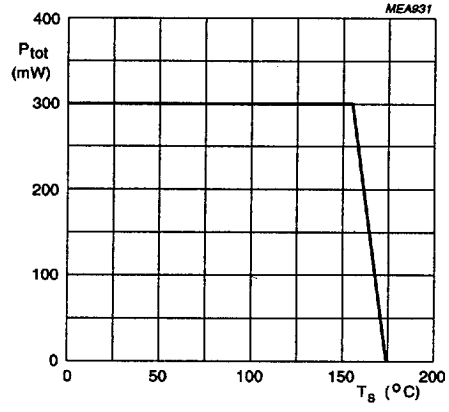

Fig.2 Power derating curve.

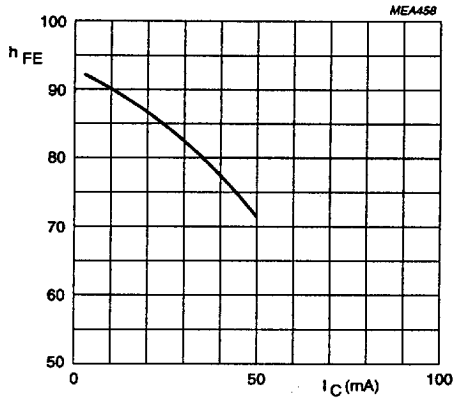

V_{CE} = 5 V; T_j = 25 °C.

Fig.3 DC current gain as a function of collector current.

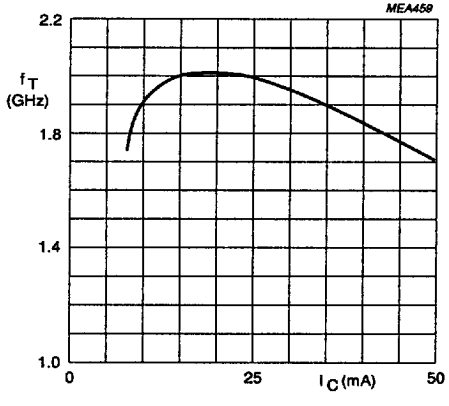

V_{CE} = 5 V; f = 500 MHz; T_j = 25 °C.

Fig.4 Transition frequency as a function of collector current.

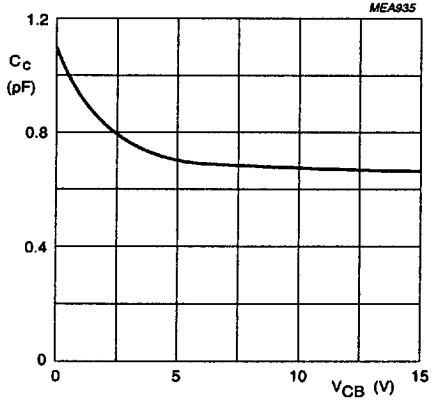

$I_E = i_e = 0$; f = 1 MHz; T_j = 25 °C.

Fig.5 Collector capacitance as a function of collector-base voltage.

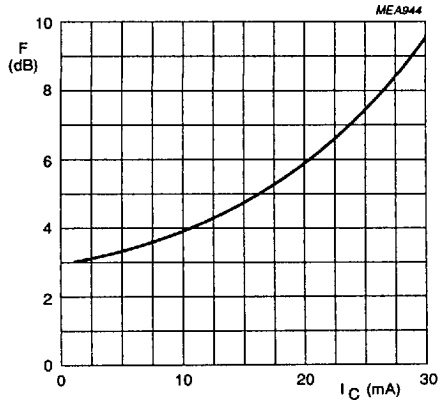

V_{CE} = 5 V; f = 500 MHz; T_{amb} = 25 °C; G_S = 20 mS; B_S is tuned.

Fig.6 Minimum noise figure as a function of collector current.

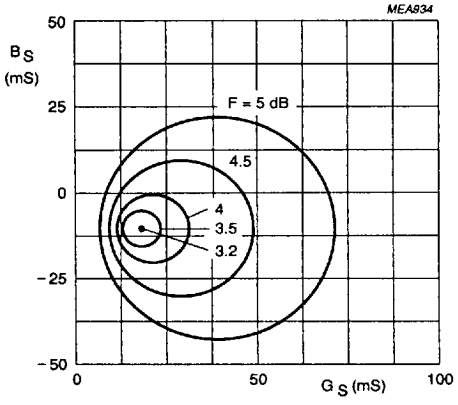

I_C = 2 mA; V_{CE} = 5 V; f = 500 MHz.

Fig.7 Noise circle figure.

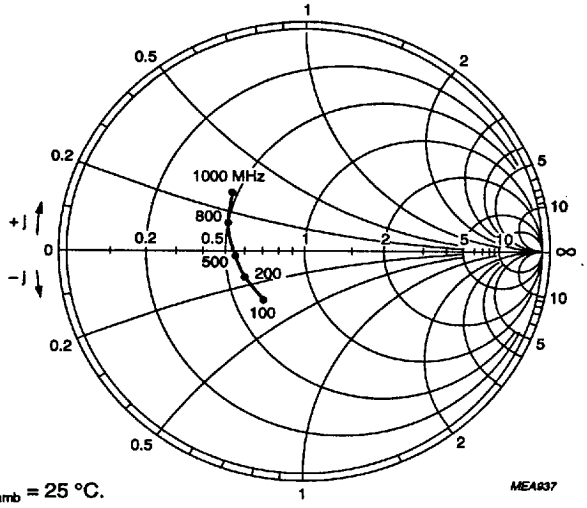

I_C = 30 mA; V_{CE} = 5 V; T_{amb} = 25 °C.

Fig.8 Common emitter input reflection coefficient (S_{11}).

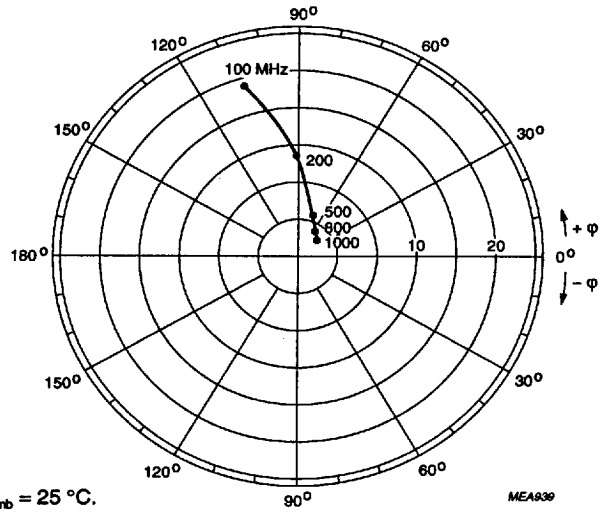

I_C = 30 mA; V_{CE} = 5 V; T_{amb} = 25 °C.

Fig.9 Common emitter forward transmission coefficient (S_{21}).

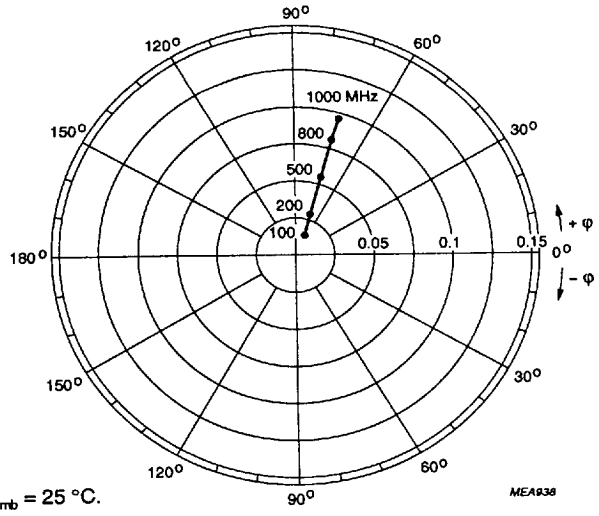

I_C = 30 mA; V_{CE} = 5 V; T_{amb} = 25 °C.

Fig.10 Common emitter reverse transmission coefficient (S_{12}).

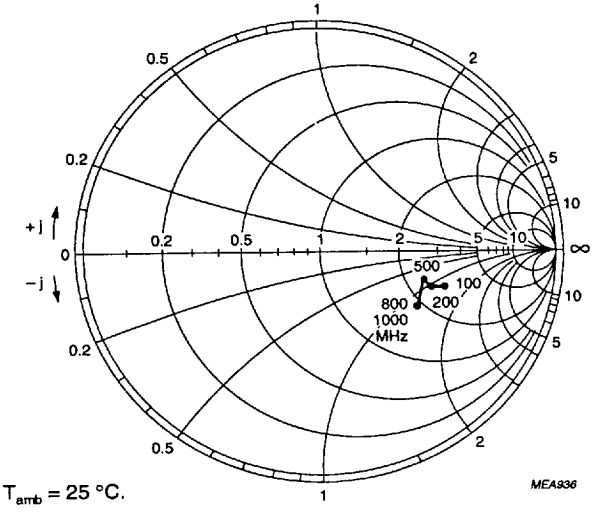

I_C = 30 mA; V_{CE} = 5 V; T_{amb} = 25 °C.

Fig.11 Common emitter output reflection coefficient (S_{22}).