Ultra High Speed Hybrid Track-and-Hold Amplifiers

HTS-0025, HTC-0300

FEATURES
Aperture Times to 20ps
Acquisition Times to 20ns
Linearity 0.01%
$10^{10}\Omega$ Input Z (HTS-0025)
±50mA Output Current

APPLICATIONS
Data Acquisition Systems
Data Distribution Systems
Peak Measurement Systems
Simultaneous Sample & Hold
Analog Delay & Storage

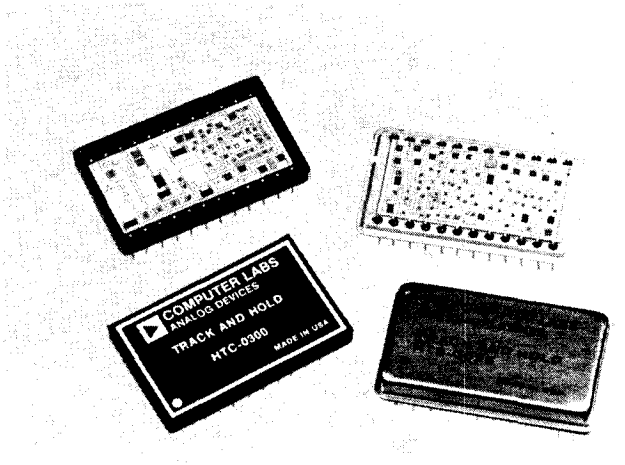

GENERAL DESCRIPTION

The HTS-0025 and HTC-0300 represent "state of the art" in the ability of an analog device to capture and hold rapidly changing transient or continuous waveforms. The user can choose between them by making engineering trade-offs between maximum speed/bandwidth capability, precision gain, feedthrough rejection, input impedance, hold time, harmonic distortion, output swing, logic type, power requirements and price. With an aperture uncertainty of only 20ps and an acquisition/settling time of 20ns, the HTS-0025 is the fastest hybrid sample/track-and-hold amplifier available.

It achieves this performance with a dc coupled Schottky diode sampling bridge driven by a $10^{10}\Omega$ input impedance FET amplifier and followed by a low impedance – 10Ω max – output amplifier.

The HTC-0300 provides 100ps aperture uncertainty and 100ns acquisition/settling time to 0.1% for a 10 volt input-output swing (less than 150ns for 12-bit settling). It achieves this speed and precision gain (-1.00 ±0.1%) with high speed op amps and diode switches. These techniques also improve feedthrough rejection, output swing, linearity, harmonic distortion and droop rate.

APPLICATIONS

The most common use for a sample/track-and-hold is to place it ahead of an A/D converter to allow digitizing of signals with bandwidths higher than the digitizer alone can handle. The use of the HTS-0025 can allow a reduction of system aperture to 20ps. These sample/track-and-hold amplifiers are also used for peak holding functions, simultaneous sampling A/D's (with appropriate analog multiplexing), and other high-speed analog signal processing applications. These hybrids have been used to construct A/D converters of up to 12 bits of resolution with word rates as high as 20MHz. The HTC-0300 is designed to be used with Analog Devices' HAS Series hybrid A/D converters.

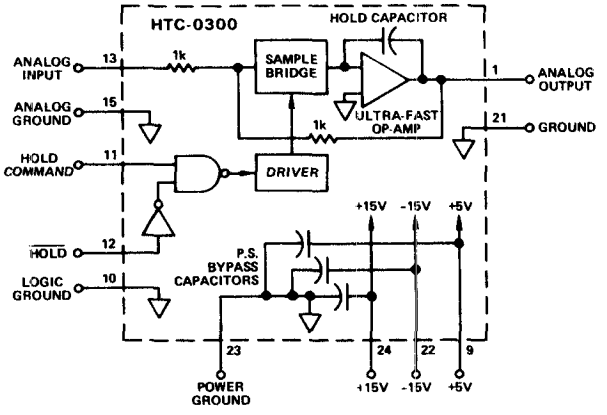

NOTE: PIN 12 SHOULD BE GROUNDED IF NOT USED.

Block Diagram – HTC-0300

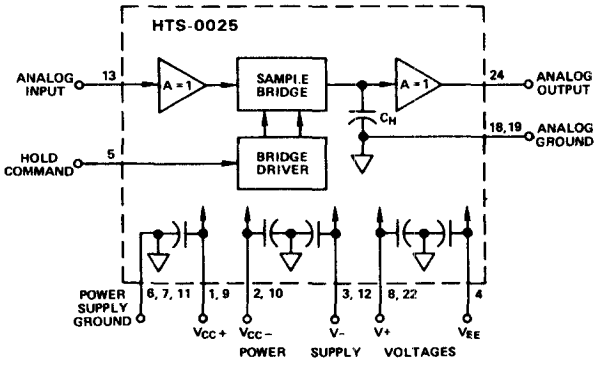

NOTE: PIN 12 SHOULD BE GROUNDED IF NOT USED.

Block Diagram – HTS-0025

SPECIFICATIONS (typical at +25°C and nominal power supply voltages unless noted otherwise)

MODEL	UNITS	HTS-0025	HTS-0025M	HTC-0300	HTC-0300M
DYNAMIC CHARACTERISTICS					
Acquisition Time (See Figure 1)					
to 1% for 1V Output Step	ns typ (max)	20 (30)	*	N/A	**
to 0.1% for 10V Output Step	ns typ (max)	N/A	*	100 (170)	100 (200)
Sample Rate[1]	MHz max	30	*	5	**
Aperture Time	ns min (typ) (max)	6 (10) (20)	*	*	*
Settling Time	ns typ (max)	20 (30)	*	100 (120)	**
Bandwidth (3dB 2V p-p Input)	MHz min	30	20	N/A	**
(3dB Small Signal Input)	MHz min	N/A	*	8	**
Slew Rate	V/μs typ (min)	400 (200)	*	250 (120)	250 (100)
Aperture Uncertainty	ps (rms) max	20	*	100	**
Harmonic Distortion (See Figure 6 and Output Loading)	dB typ (max)	65 (60)	*	75 (62)	**
Feedthrough Rejection (2V p-p, 10MHz Input)	dB min	70	*	N/A	**
(dc to 2.5MHz)	dB min	N/A	*	70	**
Droop Rate	mV/μs typ (max)	0.2 (4)[2]	0.2 (30)	0.005 (0.007)	0.005 (0.1)
Pedestal During Hold (See Figure 1)	mV typ (max)	2 (20)	*	5 (50)	**
Transients (See Figure 1)	mV typ (max)	30 (100)	*	N/A	**
ACCURACY/STABILITY DC					
Gain	V/V	+0.92 min	*	−1.00±0.1%	**
Gain vs. Temperature	ppm/°C typ (max)	20 (40)	*	10 (50)	**
Zero Offset Voltage	mV typ (max)	2 (20)	*	2 (20)	**
Offset vs. Temperature	typ (max)	50 (150)μV/°C	*	10 (15)ppm/°C	**
Linearity	% max	0.01	*	*	*
INPUT					
Voltage Range	V max	±2	*	±10	**
60dB Feedthrough Rejection	V p-p max	3	*	N/A	**
Impedance	Ω typ (min)	10^{10} (10^{9})	10^{10} (10^{8})	1000	**
Bias Current	nA max	15	100	2	**
OUTPUT					
Voltage	V max	±2	*	±10	**
Current (not short circuit protected)	mA max	±50	*	*	*
Impedance	Ω typ (max)	3 (10)	*	0.1 (dc)	**
Loading – Harmonic					
Distortion for 2V p-p 50dB	Ω min	50	*	N/A	**
Signal and Specified R_L 60dB	Ω min	100	*	N/A	**
65dB	Ω min	200	*	N/A	**
Noise[3]	mV rms	0.1 (max)	0.2 (max)	0.1	**
HOLD COMMAND (DIGITAL INPUT)					
Logic Compatible		ECL	*	TTL	**
"0" = Track/"1" = Hold[4]	V	−1.5 to −1.4/−0.7 to −1.05	*	N/A	**
"Hold" Input, "0" = Track/"1" = Hold	V	N/A	*	0 to +0.4/+2.4 to +5	**
"Hold" Input, "0" = Hold/"1" = Track	V	N/A	*	0 to +0.4/+2.4 to +5	**
POWER REQUIREMENTS – HTS					
V^+ = +15V ±0.5V (Pins 8 and 22)	mA max	40	*	N/A	**
V^- = −15V ±0.5V (Pins 3 and 12)	mA max	40	*	N/A	**
V_{CC+} = +4.4V to +15.5V (Pins 1 and 9)[5]	mA max	15	*	N/A	**
V_{CC-} = −4.95V to −15.5V (Pins 2 and 10)[5]	mA max	15	*	N/A	**
V_{EE} = −5.2V to ±0.25V (Pin 4)	mA max	40	*	N/A	**
POWER REQUIREMENTS – HTC					
±12V to ±18V	mA max	N/A	*	25	**
+5V to ±0.25V	mA max	N/A	*	25	**
Power Supply Rejection Ratio	mV/V	N/A	*	10	**
TEMPERATURE RANGE					
Operating	°C	0 to +70	−55 to +100 (case)	0 to +70	−55 to +100 (case)
Storage	°C	−55 to +125	*	*	*

NOTES:

[1] Sample rates shown are a guide only, and are based on system acquisition times – not logic speed. These rates can be exceeded with acquisition time trade-offs.

[2] Droop rate for case temperatures up to 50°C is 1mV/μs max.

[3] Noise level measured in track mode is 5MHz bandwidth. Noise level increases when high duty cycle repetitive hold command is applied. A 50% duty cycle hold command results in approximately 0.3mV (rms) total noise output.

[4] One ECL-10k Gate, no pulldown resistor.

[5] V_{CC+} may be tied to V^+. V_{CC-} may be tied to V^- or V_{EE}.

*Specifications same as model HTS-0025.
**Specifications same as model HTC-0300.

Specifications subject to change without notice.

HTC-0300 (Only)
GLASS PACKAGE
Dimensions shown in inches and (mm)

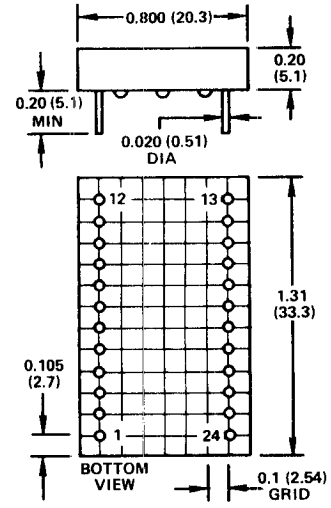

DOT ON TOP INDICATES POSITION OF PIN 1.

OUTLINE DIMENSIONS

PIN DESIGNATIONS

PIN	FUNCTION (HTC-0300)	FUNCTION (HTS-0025)
1	ANALOG OUTPUT	V_{CC}^{+} [+5V to +15.5V]
2	N/A	V_{CC}^{-} [-5V to -15.5V]
3	N/A	V^{-} [-15V]
4	N/A	V_{EE} [-5.2V]
5	N/A	HOLD COMMAND
6	N/A	GROUND
7	N/A	GROUND
8	N/A	V^{+} [+15V]
9	+5V	V_{CC}^{+} [+5V to +15.5V]
10	GROUND	V_{CC}^{-} [-5V to -15.5V]
11	HOLD	GROUND
12	$\overline{\text{HOLD}}$	V^{-} [-15V]
13	ANALOG INPUT	ANALOG INPUT
15	INPUT GROUND	N/A
18	N/A	ANALOG GROUND
19	N/A	ANALOG GROUND
21	GROUND	N/A
22	-15V	V^{+} [+15V]
23	GROUND	N/A
24	+15V	ANALOG OUTPUT

HTS-0025, HTS-0025M, HTC-0300M
METAL PACKAGE
Dimensions shown in inches and (mm)

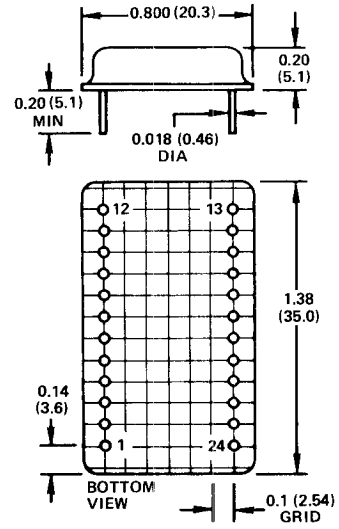

DOT ON TOP INDICATES POSITION OF PIN 1.

OUTLINE DIMENSIONS

TRACK-AND-HOLD (T/H) MODE

When operated in the T/H mode, these devices are allowed to "track" the input signal for a period of time prior to initiating a "hold command". During the track period, the output follows the input, and the devices function as operational amplifiers. The HTS-0025 operates as a precision follower with a gain of +1, the HTC-0300, -1.

When a Logic "1" is applied to the "hold command" input of the unit, its output is frozen. This output level is held until the track mode is reestablished by a Logic "0" at the hold command input. This operation is shown graphically in Figure 1. The held output level is the voltage value at the input at the instant (plus the aperture time) the hold command is applied.

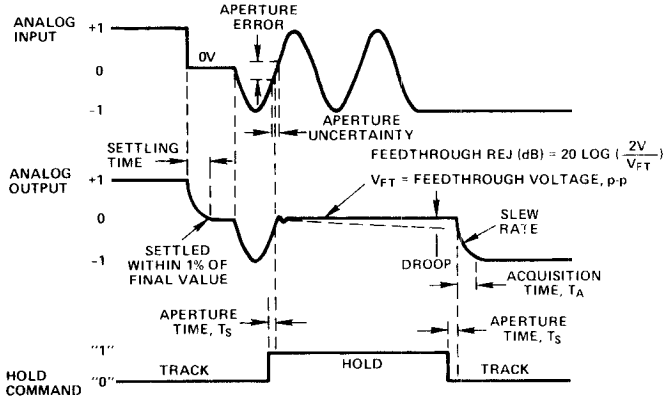

Figure 1b. Track/Hold Waveforms — HTS-0025

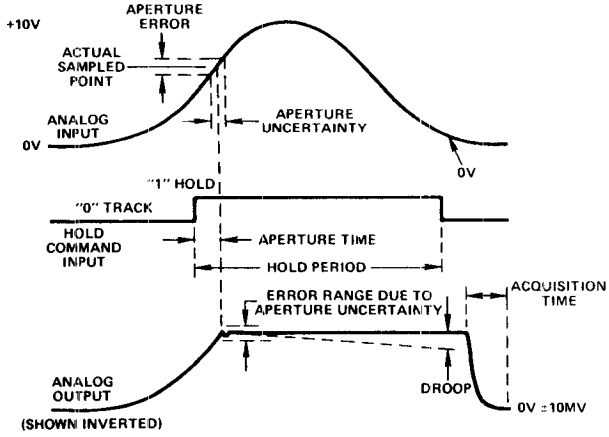

Figure 1a. Track/Hold Waveforms — HTC-0300

The HTC-0300 provides a $\overline{\text{hold}}$ input for use if the hold command is inverted, that is if the user wishes to use a "0" for the hold condition and a "1" for the track mode. Performance of the unit is identical with either type of input.

Variations in the instants of sampling are called aperture uncertainty. It appears as jitter in the sampling point and can cause significant errors when very high dV/dt inputs are sampled. During the hold period, feedthrough and droop rate can introduce errors at the output. It is important that a track-and-hold have high feedthrough rejection to prevent input-to-output leakage during the hold period. The droop rate is the amount the output changes during the hold period as a result of loading on the internal hold capacitor.

When the hold command input returns to the track condition, the amount of time required for the track-and-hold output to reestablish accurate tracking of the input signal is called the acquisition time.

SAMPLE-AND-HOLD (S/H) MODE

In the S/H mode of operation, the devices are normally left in the hold condition. A very short sample pulse is applied to the hold command input when a new sample needs to be obtained at the output. The sample pulse width is dictated by the acquisition time. For small sample-to-sample variations, a pulse width as narrow as 20 to 80ns may be used. In general, however, the pulse width should be 100 to 300ns (see Figure 4).

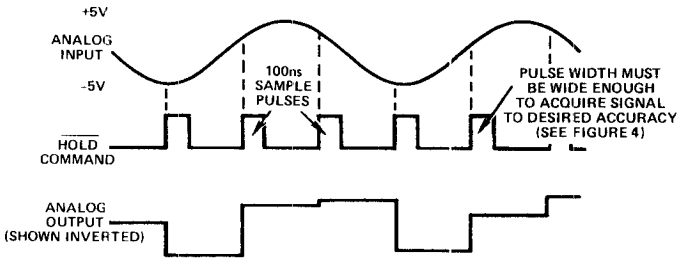

Figure 2. Sample/Hold Operation – HTC-0300

The HTC-0300 hybrid track-and-hold amplifier has been designed to operate without external trimming potentiometers and "compensation" devices required in most modular units. Active laser trimming is used on the HTC-0300 to "null" the pedestal (the offset during "HOLD" times), set the dc offset to zero, and adjust the gain of the device to unity. Internal frequency compensating elements are incorporated to make the HTC-0300 unconditionally stable and to optimize the frequency response of the internal operational amplifier for this application. Unlike other microcircuit T/H amplifiers, the HTC has a high drive capability (±50mA) and a very low output impedance which allows it to drive directly virtually all types of A/D converters (even the "current-bucking" input types which will produce a degraded A/D conversion without sufficient T/H output drive) and those with low input impedance.

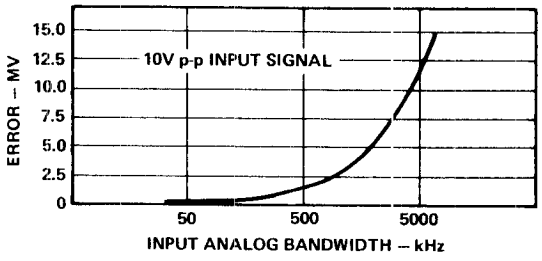

Figure 3. HTC-0300 Error Due to Aperture Uncertainty

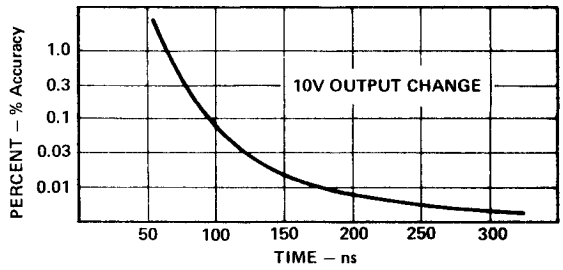

Figure 4a. Settling Accuracy vs. Acquisition Time – HTC-0300

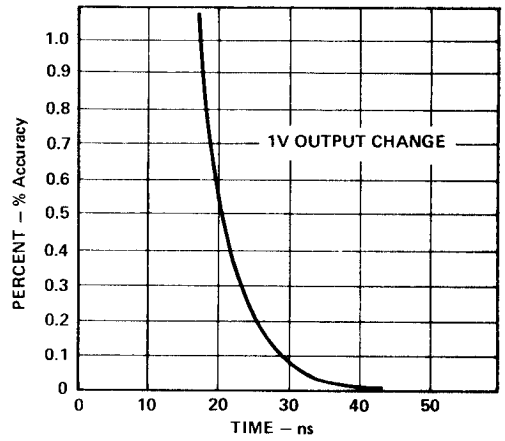

Figure 4b. Settling Accuracy vs. Acquisition Time – HTS-0025

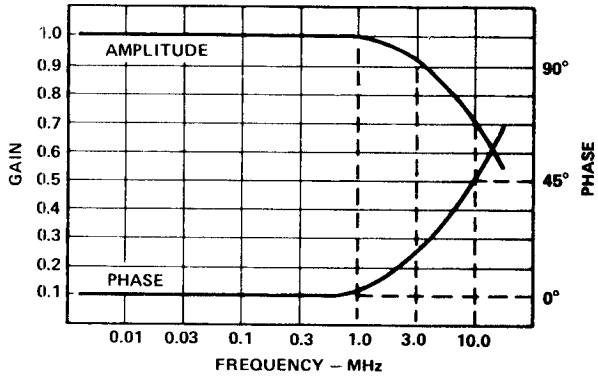

Figure 5. Amplitude and Phase Response – HTC-0300

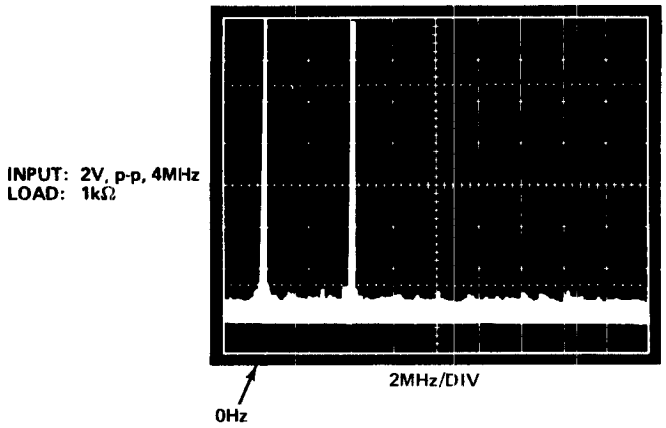

Figure 6a. Harmonic Distortion – Track Mode

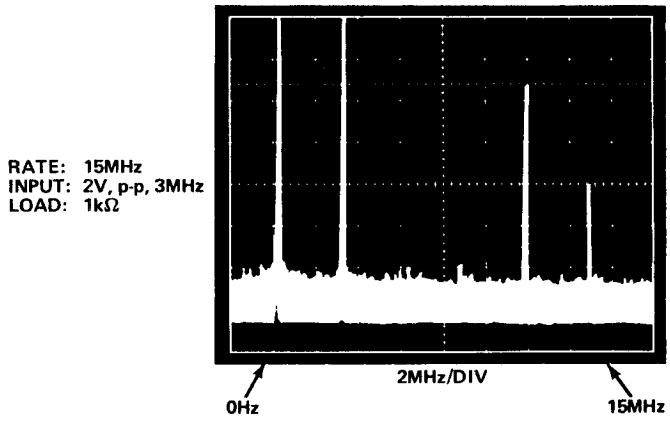

Figure 6b. Frequency Domain Outputs

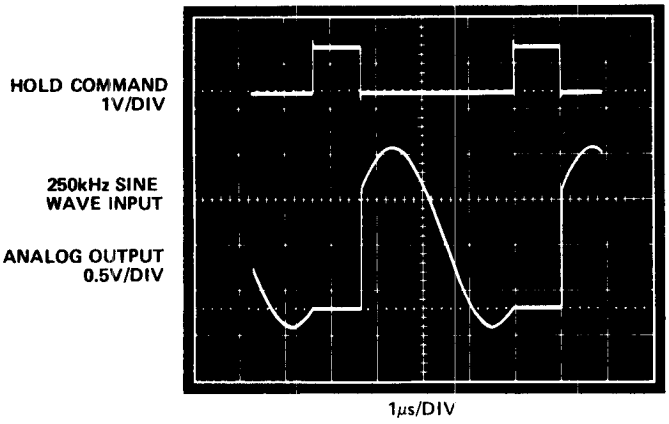

Figure 7a. Track/Hold Operation

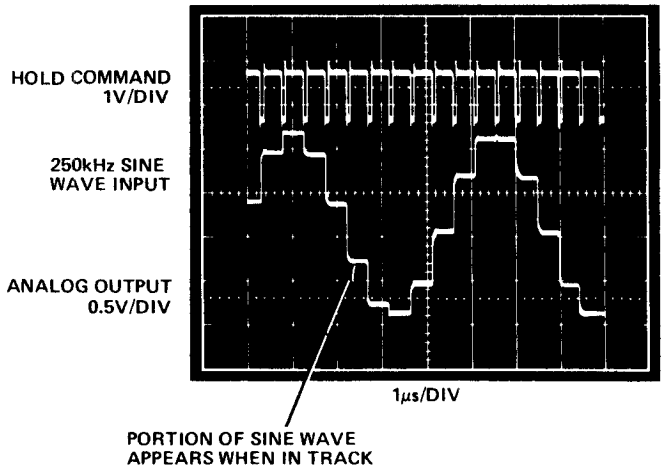

Figure 7b. Sample/Hold Operation

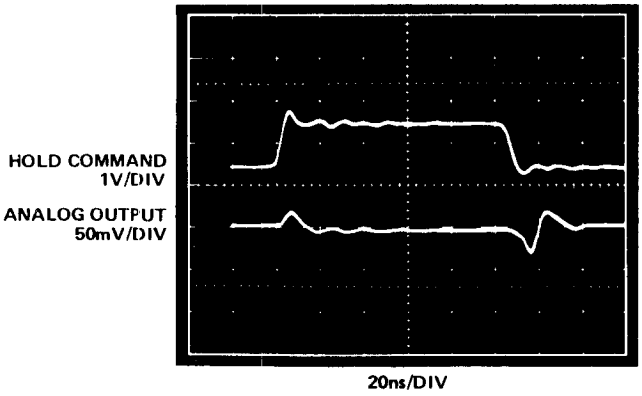

Figure 7c. Expanded View of Output Signal Showing Switching Transients and Pedestal with DC Input

A/D CONVERSION SYSTEM WITH 300kHz CONTINUOUS SAMPLING RATE AND 12-BIT BINARY OUTPUT

The circuit below illustrates a typical application of the HTC-0300 as a sample/hold amplifier preceding a successive-approximation type of A/D converter. During the conversion interval, the input voltage to the A/D must be held constant. To the extent that this input signal is not absolutely constant, an error results in the digitized output of the A/D. However, with the excellent feedthrough-rejection and droop-rate specifications of the HTC-0300, very little error in the A/D conversion process will be due to the T/H circuit. In addition, the very fast acquisition time of this hybrid microcircuit means that the A/D can be operated at very near its maximum sample rate since very little of the conversion cycle time is required for the T/H to acquire each successive signal sample.

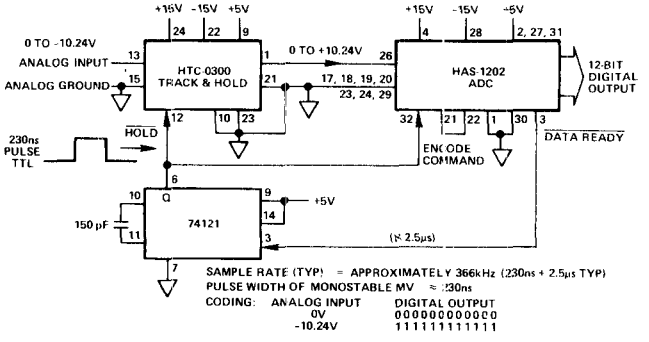

Figure 8. A/D Conversion System

HTC-0300

Sample Rate	Approximately 300kHz
Encode Command Rate (f clock)	3.9MHz
Pulse Width of Monostable Multivibrator	150ns
Analog Input	Digital Output
0V	000000000000
+10V	111111111111

Table 1. Performance Parameters For This A/D System

ORDERING INFORMATION

Order Model Number HTS-0025 or Model Number HTC-0300 for 0 to +70°C operation. For operation from -55°C to +100°C order Model HTS-0025M or HTC-0300M in metal cases. For units processed to MIL-STD-883, consult the factory or the nearest Analog Devices' sales office.